Microcontroller Based Voltage Controller in a Three-Phase Electrical Distribution Line

Nasrin Akter[1], M. A. A. Mashud[2]*

[1]Department of Computer Science & Engineering
Daffodil International University, Dhaka-1207, Bangladesh, E-mail: nasrin.cse@diu.edu.bd

[2]Department of Applied Physics, Electronics & Communication Engineering
Islamic University, Kushtia-7003, Bangladesh, E-mail: mashud@aece.iu.ac.bd

Abstract— A state-of-the-art-technology was used to design the microcontroller based voltage balancer for three phase electrical line. The fluctuation of line voltage has been questioned in recent times due to the use of heavy powered machine with three phases. This paper is focused on deriving a control scheme to drive a three phase motor that could be used in industry or households. The very simple circuitry has been employed in this design. To do this, extensive MATLAB analysis software was conducted in order to optimize the control system and finally the results are practically verified.

Index Terms— Industry, line voltage, Three phase, Unbalance, Distribution.

I. Introduction

Fluctuations of line voltages are of special attention now-a-days in Bangladesh. A need for reasonable power is required to smoothly operate electrical and electronic appliances. Quite often it happens that line voltages of some phases go down to a low level or high level. Therefore the line voltage becomes unbalanced. A large number of machines used in industries such as garments sectors, agricultural industry, cement factory, ceramic or glass factory, cold storage, dying sectors and so on are needed balanced voltage. For these erratic conditions of line voltages the valuable machines becomes damaged. Besides sometimes it makes sparking and makes serious problems in industry such as burning.

Under such erratic conditions of line voltage, in our country re-wireable fuse or miniature circuit breaker are normally used to protect different households from under and over-voltage conditions is explained in S. Islam et.al, [1]. Considering this factor, a protective device like over-voltage and over-current with time delay unit has been developed for ensuring a dependable and an effective protection to small households in year 1992 that explained in S. Islam et.al, [2]. This system is relatively slow and designed in transistor based. For the better performance another device has been developed to protect households in year 1994 which explained in S. Islam et.al, [3]. The operation speed of this device is better but it was designed in transistor based. In year 2011, another attractive device has been developed for single-phase line to protect electronic appliances from over-load which explained the author M.A.A. Mashud et.al, [4]. In this design transistor module has been replaced by IC module and use Hall Effect principle.

In year 2012, the author M.A.A. Mashud et. al, [5] explained single phase line voltage controller using microcontroller. In this design all electronic components and ICs has been replaced by using a microcontroller. But all the above designs are for single phase line voltage controller.

In year 2013, the author M.A.A. Mashud et. al, [6] explained three phase unbalanced line voltage controller. This design is better than others. This system can sense the up-down line voltages. We see that when the output of the adder circuit is exactly 6v then the machine is on otherwise the machine is off. We have found a problem in this design. When the phase voltage of line fluctuates but the adder circuit output is 6V that is any one or two phases goes to down or high but the output remains same to 6V. It may be damage or burn the machine.

Now, the author developed a three phase unbalanced line voltage controller to avoiding the problem. In this design, the machine must be OFF for any fluctuations of phase voltages. When all phase voltages are same then the machine will be ON. Easily available components and simple circuitry, the system should be beneficial in providing low-cost. On the other hands, the locally available devices are costly and also the design is complex.

II. SYSTEM DESIGN

The system is divided into five main parts, namely, the low voltage power supply circuit, the current sensor circuit, rectifier and filter circuit, microcontroller, indicator circuit and relay driver circuit. The current sensors circuits consist of using Hall Effect principle. The analogue outputs from these sensors are converted into digital signal by an ADC which encompasses the microcontroller. The block diagram and the complete circuit diagram of the proposed system are depicted in Fig. 1 and Fig. 2 respectively.

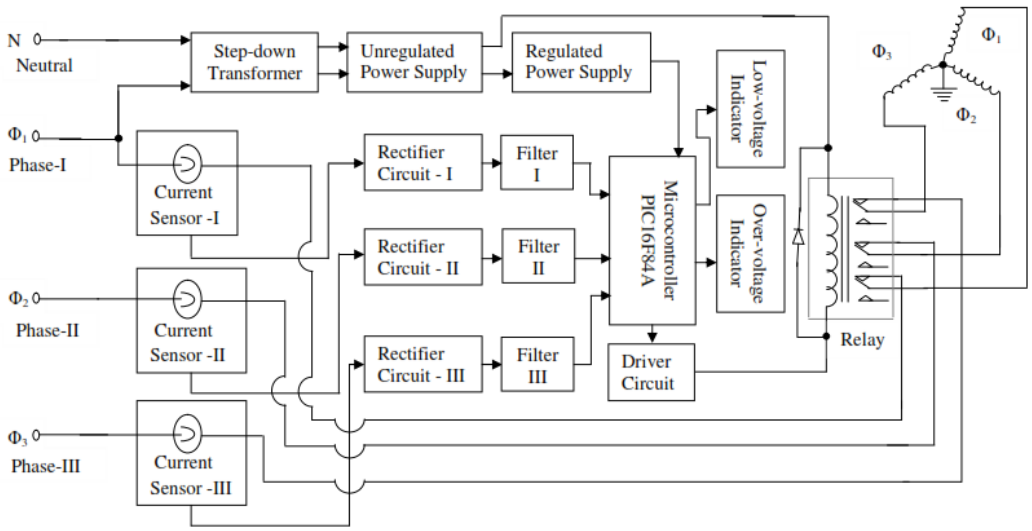

Fig.1 Simplified Block Diagram of the Proposed System

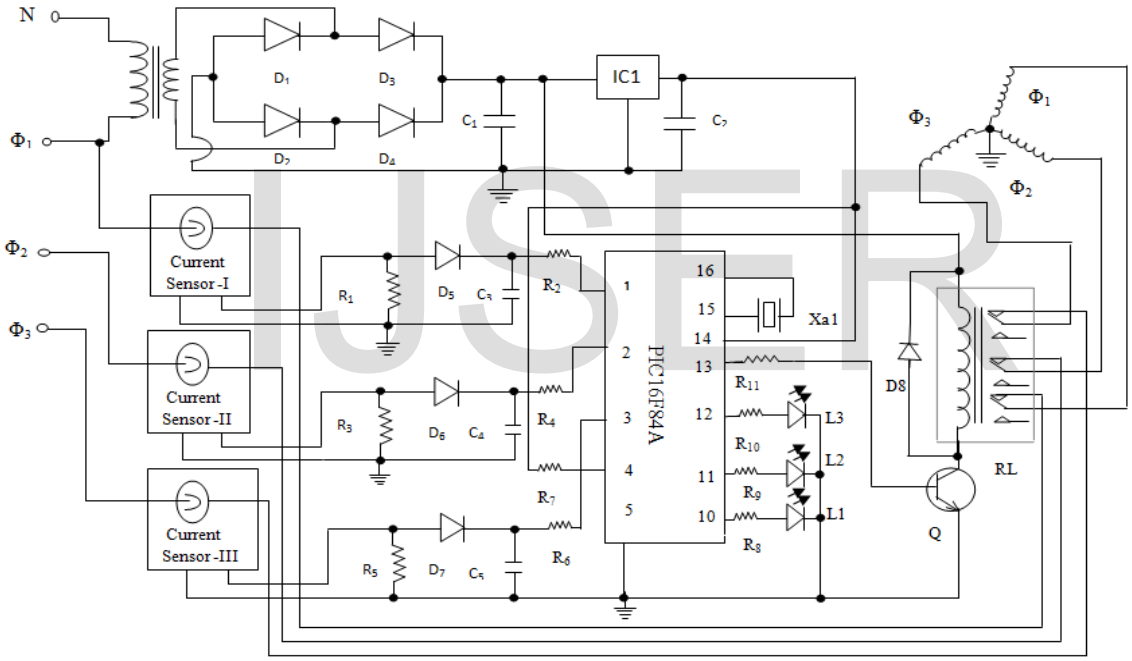

Fig.2 Complete Circuit Diagram of the Proposed System

A. *Low-voltage Power Supply*

The low-voltage power supply circuit consists of transformer X, D_1, D_2, D_3, D_4, Capacitor C_1, C_2 and IC1 [7]. The output of the IC1 is +5V DC. The capacitor C_2 is connected across the output of IC1 to eliminate the high frequency noise.

B. *Current Sensing Circuit*

In this design we have used three current sensors for three phases. Current sensor-I is used for phase-I detection, current sensor-II is used for phase-II detection and current sensor-III is used for phase-III detection. The first current sensing circuit is consisting of current sensor-I, resistor R_1, R_2, diode D_5 and capacitor C_3. Resistor R_2 is used to limit the current of for phase-I. The second current sensing circuit is consisting of current sensor-II, resistor R_3, R_4, diode D_6 and capacitor C_4. Resistor R_4 is used to limit the current of for phase-II. The third current sensing circuit is consisting of current sensor-III, resistor R_5, R_6, diode D_7 and capacitor C_5. Resistor R_6 is used to limit the current of for phase-III. One of the connecting wires of the load passes through the current sensor without interrupting it to the coil. When current passes through the load, an ac voltage is induced across the coil of the sensor.

The sensor is designed in such a way that the voltage developed across the coil is proportional to the amount of load current. The output of the current sensor is rectified and filtered.

C. Microcontroller Unit

This powerful (200 nanosecond instruction execution) and easy-to-program (only 35 single word instructions) CMOS FLASH-based 8-bit wide data type microcontroller packs Microchip's powerful Programmable Interface Controller (PIC) architecture into a 18-pin package [8] and is compatible with the PIC16F84A devices. The PIC microcontroller is a Multipoint Control Unit (MCU) that is used in this project. MCU measures the period of the input signal and it converts into a digital voltage data. The PIC's Console Command Processor (CCP) which can also detect rising or falling edges every four or 16 pulses. PIC16F84A features: 1024 words of electrically erasable programmable read-only memory (EEPROM) data memory, 64 bytes of data RAM, 64 bytes of data EEPROM, 13 I/O pins with individual direction controls, self programming, 4 channels of 10-bit Analog-to-Digital (A/D) converter [9, 10]. All of these features make it ideal for an advanced level A/D applications in automotive, industrial appliances and consumer applications.

D. Relay Driver Circuit

The relay driver circuit consists of R_{11}, D_8, transistor Q, and relay RL. The transistor Q acts as emitter follower [11], the output of which drives the relay RL. Diode D across the relay coil protects the transistor Q from the back EMF induced in the relay coil during breaks. The load current depends on the contact rating of the relay. A 12 volt relay is used in this design. At least 1 volt is required to the base of transistor Q.

III. System Software

The software was divided into different sub routines and main routines. The compiler PCWH was used to develop the software [12].

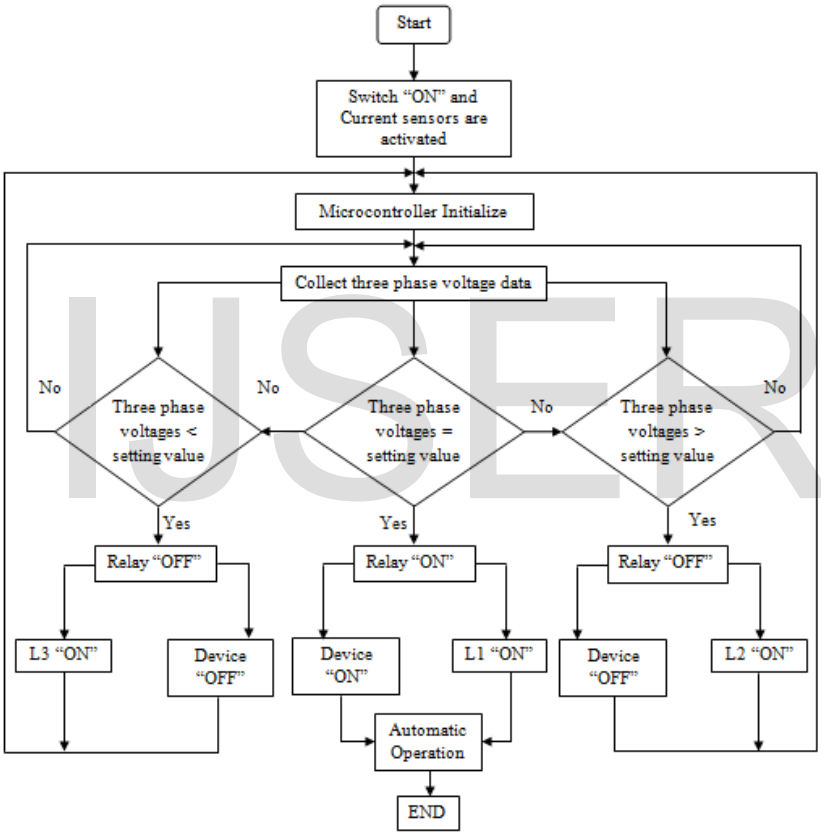

Fig.2 Flow Chart of the System Software

The system program and flow chart is depicted in Figure 3 that shows the interaction of line voltage and water-pump via microcontroller. When the system is activated, it will invoke the microcontroller to reset all hardware devices in a normal and controlled mode. The current sensor will then start to sensing the current and produce the corresponding voltage data that records the microcontroller. If the collected voltage data is less than the setting value, the relay turns off; LED L3 indicates light and the device off which represents low voltage. Also, if the collected voltage data is high than the setting value, the relay turns off, LED L2 indicates light and the devices also off which represents over voltage. Otherwise, the device will be switched ON automatically and the system will complete automatic operation. The LED L1 indicates light which represents normal voltage that means voltages of three phases are equal.

IV. Results and Discussion

The transfer function of three phase line voltage is implemented in Simulink (Matlab). The result is given in Fig. 3. This figure shows the line to neutral voltages and line to line voltage. Hence it seen that the line voltages is in normal condition.

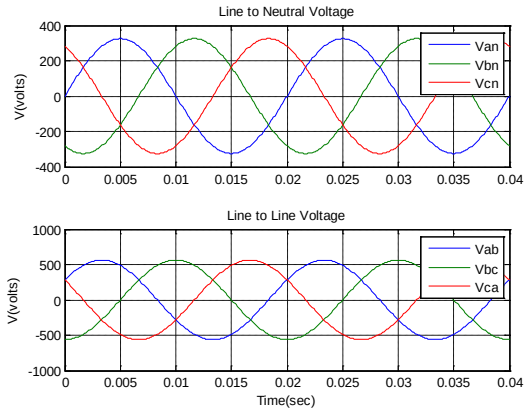

Fig. 3: Simulation in Simulink

The complete hardware design is implemented and very satisfactory results are obtained. Firstly, the low voltage power supply unit was designed for highly regulated output to bias the major components of this system. In this design we had varied the input ac voltage from 198 volt to 248 volt but the output was remain constant at +5 volt DC. The experimented output waveform of this unit is depicted in Fig. 4.

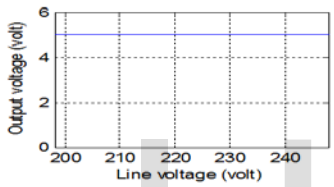

Fig. 4: Low-voltage power supply

The output of the phase detectors circuit is shown in Fig.5. From Fig.5 it is clear that phase-I, phase-II and phase-III produces exactly 2 volt DC when the line voltages are at normal condition that means no fluctuations in the line voltages. The output of the detector circuit is measured by volt meter and also oscilloscope and obtained the result is very nearly to 2volt DC.

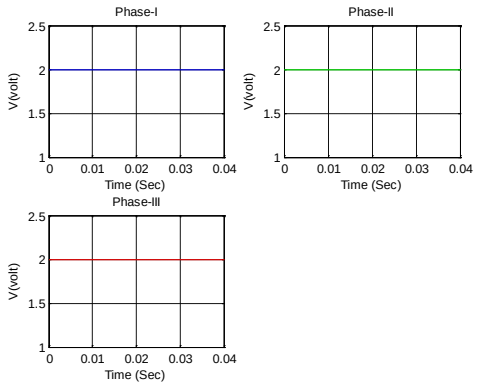

Fig. 4: Output of phase voltages at normal condition

The data table for various conditions of line voltage is shown in Table 1. From the table it is clear that: if the voltage of any one or more phase goes to down, the output of the corresponding phase detector circuit becomes less than 2volt. For this case the microcontroller is programmed in such a way that it gives the output of 0 volt. So, the transistor switched OFF, hence the relay turns OFF. Therefore the device becomes OFF. Also, if the voltage of any one or more phase goes to up, the output of the corresponding phase detector circuit becomes greater than 2volt. For this case the microcontroller is programs in such a way that it gives the output of 0 volt. So, the transistor switched OFF, hence the relay turns OFF. Therefore the device becomes OFF. Besides, when the voltages of three phases are same i.e. output of all sensors are exactly 2 volt, in this case the microcontroller is programed that it gives the output of 5 volt. Therefore, the transistor becomes ON and the device is ON.

TABLE I
DATA TABLE FOR VARIOUS CONDITIONS OF LINE VOLTAGE

Phase –I voltage (φ_1)	Phase-II voltage (φ_2)	Phase-III voltage (φ_3)	Line Voltage Status	Machine Status
(φ_1) < 2 V	(φ_2) < 2 V	(φ_3) < 2 V	Low Voltage	OFF
(φ_1) < 2 V	(φ_2) < 2 V	(φ_3) = 2 V		OFF
(φ_1) < 2 V	(φ_2) =2 V	(φ_3) < 2 V		OFF
(φ_1) < 2 V	(φ_2) = 2 V	(φ_3) = 2 V		OFF
(φ_1) = 2 V	(φ_2) <2 V	(φ_3) < 2 V		OFF
(φ_1) = 2 V	(φ_2) < 2 V	(φ_3) = 2 V		OFF
(φ_1) = 2 V	(φ_2) =2 V	(φ_3) < 2 V		OFF
(φ_1) = 2 V	(φ_2) =2 V	(φ_3) = 2 V	Normal Voltage	ON
(φ_1) > 2 V	(φ_2) > 2 V	(φ_3) > 2 V	Over Voltage	OFF
(φ_1) > 2 V	(φ_2) > 2 V	(φ_3) = 2 V		OFF
(φ_1) > 2 V	(φ_2) = 2 V	(φ_3) > 2 V		OFF
(φ_1) > 2 V	(φ_2) = 2 V	(φ_3) = 2 V		OFF
(φ_1) = 2 V	(φ_2) > 2 V	(φ_3) > 2 V		OFF
(φ_1) = 2 V	(φ_2) > 2 V	(φ_3) = 2 V		OFF
(φ_1) = 2 V	(φ_2) = 2 V	(φ_3) > 2 V		OFF

V. CONCLUSIONS

The developed system was put under a series of tests for ascertaining its performance as a protective device and very satisfactory results were obtained. When the load current exceeds 10A, the load was turned off. The upper and lower level responses of this device were also found to be sufficiently quick, so that the safety of the equipment protection by the device under any undesired transient condition of the main supply was ensured. This device had a very high sensitivity. It was also simple in design, reliable in operation and cost competitive with any other product available in the market. From the above analysis, it is concluded that this device can easily protect electrical appliances against fluctuation of line voltages and over load current.

References

[1] M. S. Islam and M. A. Zulquarnain, *Journal of the Bangladesh Electronics Society*, pp 31, 1991.
[2] M. S. Islam and M. Kamruzzaman, *Journal of the Bangladesh Electronics Society*, Vol.2,No. 1, pp 29, 1992.
[3] S. Islam, *Nuclear Science and Applications*, Vol. 3, No. 2, 1994.
[4] M.A.A. Mashud, E. Haque and S. Islam, *Jahangirnagar Physics Studies*, Vol. 17, pp151, 2011.
[5] M.A.A. Mashud, M.A.A. Tariq, M. Shamim Hossain and Md. Serajul Islam, *I. J. Information Sciences and Techniques (IJIST)* Vol.2, No.4, pp 49-56, 2012.
[6] M.A.A. Mashud, S.C. Barman, M.R.A. Bhuiyan and Md. Serajul Islam, *I. J. Intelligent Systems and Applications (IJISA)* Vol.6, No.10, pp 35-42, 2013.
[7] V. K. Mehta and R. Mehta, Principles of Electronics, S. Chand & Company Ltd. New Delhi, pp 438, 2007.
[8] http:/ww1.microchip.com/downloads/en/devicedoc/41190c.pdf, 2
[9] M. A. Mazidi, R.M. Kinlay & D. Causey, "PIC Microcontroller", Prentice Hall Inc.,pp 24, 2008.
[10] J. B. Peatman, "Design with PIC microcontroller", Prentice Hall Inc., pp 2, 1997.
[11] B.L. Theraja and A.K Theraja, A Textbook of Electrical Technology, S. Chand & Company Ltd. New Delhi, pp 2105, 2002.
[12] PCWH Compiler®IDE version 3.43, www.ccsinfo.com